XIV Configuration list

NO.	Name	Specification	Quantity	Remark
1	Lamp head	LED-80W	1	
2	Center handle	—	1	
3	Spring arm	—	1	
4	Middle column	—	2	
5	Handle	—	1	
6	Base	—	1	
7	Power cord	0.752x3x.8m	1	
8	Fuse	F3AL250V-φ5x20mm	1	
9	Tools	4# Hexagon socket wrench	1	
10	User manual	A5	1	
11	Certificate	—	1	

2025-04-29 version 1

KD-2036L-4 Operation Lamp

USER MANUAL

NANJING YANAN SPECIAL LIGHTING FACTORY

Content

I Brief introduction.....1

II Performance summary.....1

III Main technical parameters.....1

IV Security tips and symbol instructions.....2

V Working environment.....2

VI Product interface.....3

VII Usage.....3

VIII Attentions.....6

IX Failure judgment and eliminating methods.....7

X Bulb replacement.....8

XI After-sales service and warranty.....8

XII Transportation and storage condition.....8

XIII Warranty card and maintenance card.....9

XIV Configuration list.....10

XIII Warranty card and maintenance card

Warranty card

Company name:			
Address		Phone No.	
Product name		Model	
Serial Number		Manufacture date	
Sale date			
Fault description:			
Remark: The warranty of our products is 18 months since release date.Please keep the certificate and instruction properly, and send it back with the product when repairing.			

(Please truthfully fill in this form, cut it according to the dotted line and send it back to our company, thank you for your cooperation)

Maintenance card

Company name:			
Address		Phone No.	
Product name		Model	
Serial Number		Manufacture date	
Sale date			
Fault description:			
Note: if you use this card beyond warranty period, you can enjoy 30% discount repair service.			

X Bulb replacement

The bulb of the operation lamp is LED light source, normal life is up to 10000 hours, no need to replace normally. In case of any failure, please inform the manufacturer in time for processing.

XI After-sales service

◆The product warranty period is 18 months
◆During warranty period, send or give us your warranty card and purchase invoices, we will provide free maintenance service when you have quality problems.
◆Light bulbs are consumable accessories.
◆If you modified the function by yourself and then it does not work , is not covered under warranty.
◆If the marks on the product such as model, serial number, date of manufacture has been altered, deleted, moved, or unidentifiable, will not provide free warranty service.
◆Failure caused by human factors such as falling, squeezing, soaking and damp is not covered by the warranty
◆The production date is shown on label, service life is 5 years, we provide lifetime maintenance.
◆After-sales No.:+86-25-52777091 Fax:+86-25-52777092

XII Transportation and storage condition

Environment temperature: -40℃～55℃
Relative humidity: 30%~80%
Atmospheric pressure: 500hpa~1060hpa

I Brief introduction

KD-2036L-4 operation lamp uses high-power LEDs as the light source. It has high brightness and adjustable brightness. The light color is like sunlight, and the object being illuminated does not experience temperature rise. The lifespan is extremely long. It is composed of movable base, middle column, spring arm, and lamp head.

The lamp panel diameter of the operation lamp is 400mm,larger than ordinary examination lamp, smaller than shadowless lamp. It makes up for not concentrating the light, short lighting depth, low illumination of examination lamp,and high price of shadowless lamp. The base is equipped with casters for easy movement; the lamp head can rotate freely by 300 degrees and can be operated by the central handle, allowing for multi-angle lighting.It suitable for medical beauty, pet medical care, outpatient departments of various departments, and dental implant surgeries.

II Performance summary

1.In the design of this product, low voltage output cold light lighting design is adopted, wide voltage power supply system is used.Low pressure energy saving, stable performance,
safe,reliable and long lifetime.
2.Design and production of this operation lamp strictly executes the first part of safety requirements of medical electrical equipment GB9706.1-2020: general requirements which is guaranteed in safety.

III Main technical parameters

1. Rated voltage: AC 100~240V 50Hz/60Hz
2. Input power: ≤ 70VA
3. Fuse: F3AL 250V x 1
4. Product specification: LED-80W
5. Product color temperature: 5000K~6000K
6. Lamp head diameter: 400mm
7. Working distance: 700mm

IV Security tips and symbol instructions

1.Before use, read and understand all the contents in the manual, and operate strictly in accordance with the requirements.
2.The installation and commissioning of the operation lamp must be carried out by professionals.
3.Before cleaning the operation lamp, the power supply should be cut off, the power connection should be unplugged, and liquids or sprays should not be used to clean the lamp.
4.Do not use this product near water. Do not place any items on the power cord of the operation lamp.
5.When changing the bulb, the power supply should be cut off and the power cord should be unplugged.
6.The maintenance of the operation lamp should be carried out by professionals. It is recommended that operators wear electrostatic rings when working.
7.The brightness of the operation lamp is relatively high and it must not be directly used for eye lighting!
8.Graphic symbol instructions

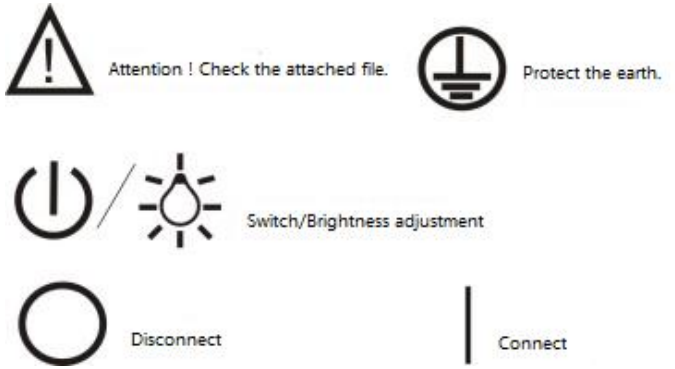

V Working environment

Environment temperature: -5℃ ~40℃
Relative humidity: 35%~75%
Atmospheric pressure:700hPa～1060hPa

8.Bulbs are consumables and have a basic life span. The normal life of LED bulb is about 10000 hours. Pay attention to how long bulbs are used and prepare for them in advance.
9.The service life of the operation lamp is five years. After the expiration, if it is scrapped, its metal, electronic components, plastic, glass and other materials should be uniformly and strictly treated in accordance with local environmental protection regulations to prevent their spread or reuse, minimizing the risk of environmental pollution.

IX Failure judgment and eliminating methods （This requires professional operation）

Fault phenomenon	Reason	Solution
The lamp is not on.	1.The power switch⑬ is not turned on.	Turn on the power switch.
	2.Power supply circuit is no electricity.	Check the power supply circuit of the network.
	3.The fuse has blown.	Open the fuse box⑫ and replace with fuses of the same specification.
	4.Lamp switch is not turned on.	Touch the switch/brightness adjustment③ to turn on the lamp.
	5.Poor contact with plug-ins.	Check the plug-ins in Picture 2-1、2, Picture 3-1、3, and reconnect them securely.
	6.The power board is faulty.	Replace the power board of the same specification.
	7.Other faults	Contact the service department of our company.

device, hold the handle with your hand to push it to the flat and suitable position, then lock the braking device and plug in the power cord.

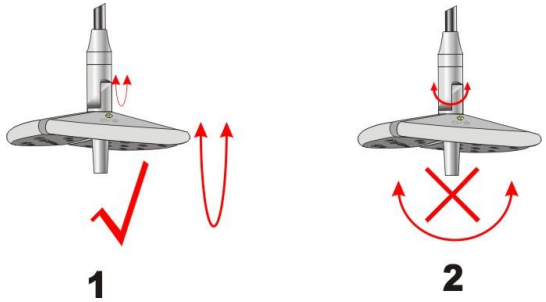

Picture 4

VIII Attentions

1.When the operation lamp is in use, it should be placed on a flat surface and kept away from pedestrian walkways.
2.Backup fuses and bulbs should be placed in the working area of the surgical lighting equipment, and their specifications and models must be consistent with the technical parameters.
3.The old bulbs removed from the operation lamp should be placed in the designated waste bin.
4.Each month,use 75% alcohol cotton to remove dust on the surface of the operation lamp.[Note: Before cleaning, please unplug the power cord. After cleaning, place it in a well-ventilated area for 30 minutes.]
5.Conduct a comprehensive inspection of nut, switch, brightness and noise of the operation lamp every quarter, timely repair and adjustment if any abnormality is found.
6.The lens surface of the operation lamp should be cleaned frequently with medical gauze or soft brushes to remove dust and maintain the light intensity.
7.It is strictly prohibited to hang any items other than this equipment on the operation lamp body. Do not heavily pull or rotate the lamp head or lamp arm when in use.

VI Product interface（Picture 1）

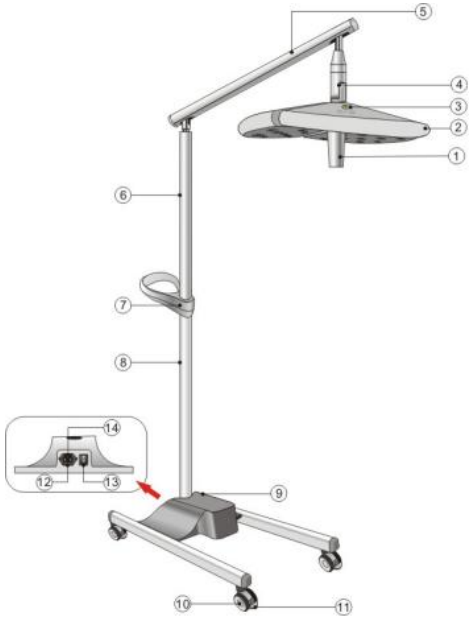

①Center handle ②Lamp head ③Switch/Light intensity adjustment ④Steering joint ⑤Spring arm ⑥Middle column2 ⑦Handle ⑧Middle column 1 ⑨Base ⑩Floor wheels ⑪ Floor brake ⑫Safety box ⑬Power switch ⑭Power socket

Picture 1

VII Usage

1.Check before use
1)Open the package and check if the product is damaged or missing parts.
2)Check whether the product model, name, quantity and accessories are consistent with the Configuration List according to the Configuration List. If any abnormality is found, please contact the manufacturer in time.

3)Read the manual carefully against the product to keep in mind the precautions and be familiar with the installation steps.

2.Installation

1）First, remove the two screws from the base connection piece, firmly connect the power connection plug, align the middle column 1⑧ with the base connection piece, then install the two fixing screws. Do not tighten them yet. Tighten them separately after both screws are installed. Remove the fixing screws for the side handles and insert the handle⑦ onto the middle column 1⑧, as shown in Picture 2-1、2.

2）First, remove the two fixing screws on the middle column connection piece. Firmly connect the power input plugs of the middle column 2⑥ and the middle column 1⑧. Then, connect the middle column 2⑥ and the middle column 1⑧ together. Install two fixing screws, do not tighten them yet. After both screws are installed, tighten them separately, as shown in Picture 2-3.

3）Move the handle upwards and align it with the fixed screw holes. Install 4 handle fixing screws. Do not tighten them yet. After all the screws are installed, tighten them separately, as shown in Picture 2-3、4.

Picture 2

4）First, remove one spring arm fixing screws at the upper end of column 2⑥. Firmly connect the power connection plugs. Then, connect the connection piece of spring arm⑤ with column 2⑥. Install one fixing screws at the upper end and tighten it, as shown in Picture 3-1、2.

5）First, remove the fixing screws on the connection piece of the lamp head②, firmly connect the power connection plug, then align the lamp head② with the spring arm⑤, install the fixing screws and tighten them. Finally, rotate the center handle① in the direction indicated by the arrow and install it. The operation lamp is installed. See Picture 3-3、4、5.

Picture 3

3.Usage

1）Connect the power cord to the network power supply and the power socket⑭, then turn on the power switch⑬. The operation lamp will light up.

2）The operation lamp has three levels of brightness adjustment. When the power switch⑬ is turned off and then turned on again, the brightness will be at its maximum level.

3）Touching switch/brightness adjustment③ can reduce the brightness until the lamp is turned off.

4）By grasping the central handle, you can adjust the position and angle of the lighting. You can also perform a 90° vertical turn adjustment through the turning joint ④, as indicated by the arrows in Picture 4-1. [Do not turn as indicated by the arrows in Picture 4-2, as it will cause damage to the joint and render it unusable.]

5）When the surgical lighting lamp needs to be moved during use, first turn off the switch and unplug the power cord, release the braking